SPEC SHEET - H56702Z00UK

POWERED BY G5 TECHNOLOGY

Zip HydroTap

All-in-One Classic Plus

FILTERED: BOILING CHILLED
UNFILTERED: HOT & COLD

The world's most advanced drinking water system, the HydroTap Classic Plus All-in-One delivers a choice of instant filtered boiling and chilled water with unfiltered hot and cold water for washing up. From a single tap and under counter command centre, the Classic Plus All-in-One dispenses only the purest tasting water, filtered to a market-leading 0.2 micron - 25 times more effective than a standard water filter jug. To prioritise user safety at work, the HydroTap doesn't splash or spit when dispensing water, and features two boiling water safety modes and a cool to touch tap. What's more, the HydroTap features superior technology to conserve water while saving energy and time.

Actual product may vary slightly depending on functionality.
The image shown is a representation only.

STANDARD

MODEL	MIXED HOT AND COLD	FILTRATION 0.2 MICRON	FONT	CO_2	NOMINAL POWER RATING KW	COMMAND CENTRE DIMENSIONS W X D X H
H56702Z00UK	Y	Y	N	N	2.15 kW @ 230V AC	280mm x 478mm x 333mm

For details of the alternative tap finishes and accessories please see the 'Accessories' section

Features and benefits

Advanced filtration

Zip MicroPurity™ filters remove particles larger than 0.2 micron, such as dirt, lead and microplastics, as well as 97% of chlorine and 99.9% of microbiological cysts, providing pure-tasting drinking water.

Environmentally conscious operation

The HydroTap boasts a range of eco-friendly functionalities, including water conserving air cooling technology, the use of zero-impact refrigerant gas R290 and energy saving sleep modes.

Unique user-safety options

The Zip HydroTap is designed with safety in mind, with boiling isolation, cool touch tap and safety lock features. The boiling point is factory set to 98 degrees celsius, to avoid spluttering steam.

Enhanced hygiene

The 5th generation HydroTap command centre has SteriTouch® embedded throughout the water path. This reduces surface bacteria by 99.99% providing extra protection.

Product detail

Specification type

Product code	H56702Z00UK
Product name	HydroTap G5 Classic Plus All-in-One boiling chilled 100/75 plus hot & cold (mains) bright chrome for work

Capacity, weights & dimensions

Water functions	Boiling, Chilled
Boiling capacity	100 Cups per hour
Chilled capacity	75 Glasses per hour
Unit dimension (W x D x H)	280mm x 478mm x 333mm
Product weight - empty / full	22kg / 36kg

Plumbing

Wholesome water inlet supply required	Hot & Cold Feed
Supply pressure range	1.7bar - 5bar
Supply connection (hot & cold)	1 x isolated 1/2"BSP BSP fitting (flexible supply hoses included)
Installation	Must comply with current water supply regulations

The minimum water pressure will vary if a limescale filter is installed. Please contact us to discuss your requirements.

Electrical

Command centre power rating	2.15 kW @ 230V AC
Voltage supply	13 amps
Power supply requirements	1 x 13amp socket outlet
Cable length	1.8m fitted with UK standard 3-pin plug
Installation	Must comply with current IEE regulations

Tap design

Style	HydroTap All-in-One Classic Plus
Finish	Bright Chrome
Installation hole cut size	50mm
Rotation	180 degree
Disability options	No
Country of Origin	Australia

Command centre

Factory temperature boiling	98°C
Factory temperature chilled	6-10°C
Filtration	0.2 Micron Filter Cartridge
Flow rate	4 l/min
Wholesome water supply requirements	Hot & Cold Feed
Refrigerant	R290
Tank material	PPS
Country of origin	Australia

Tap installation

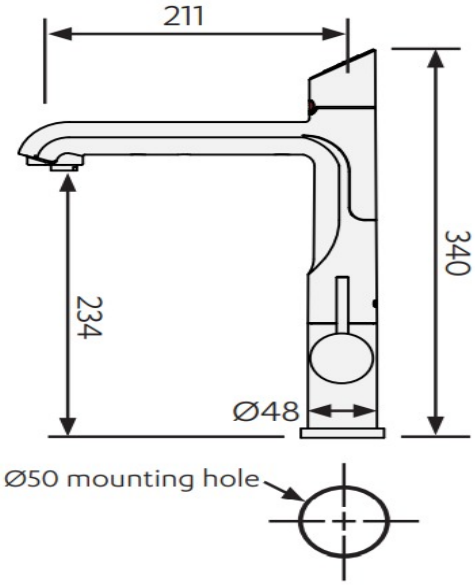

Under-counter unit installation

Clearance space required
for under counter unit

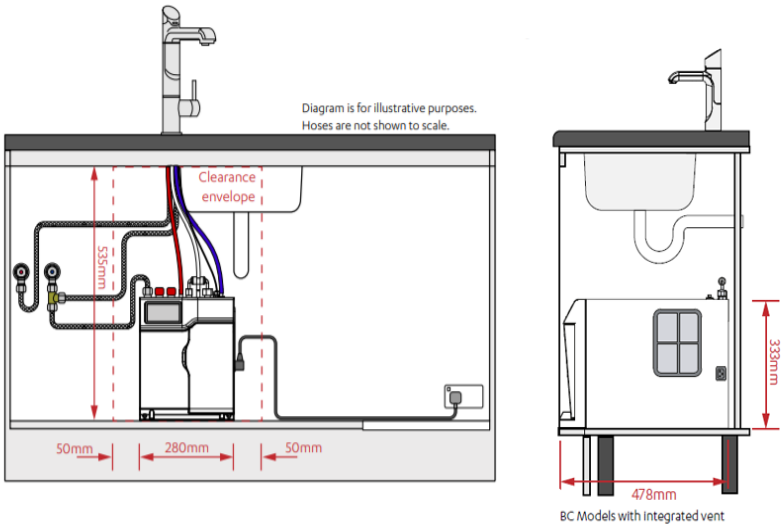

Accessories

Visit specify.zipwater.co.uk to find out more information about Zip HydroTap All-in-One Classic Plus Accessories

Image	SKU	Title
	FL500 KIT	Limescale prevention filter kit 3,750 litres
	FL1000 KIT	Limescale prevention filter kit 7,000 litres
	FL1500 KIT	Limescale prevention filter kit 10,000 litres
	FL2000 KIT	Limescale prevention filter kit 16,500 litres